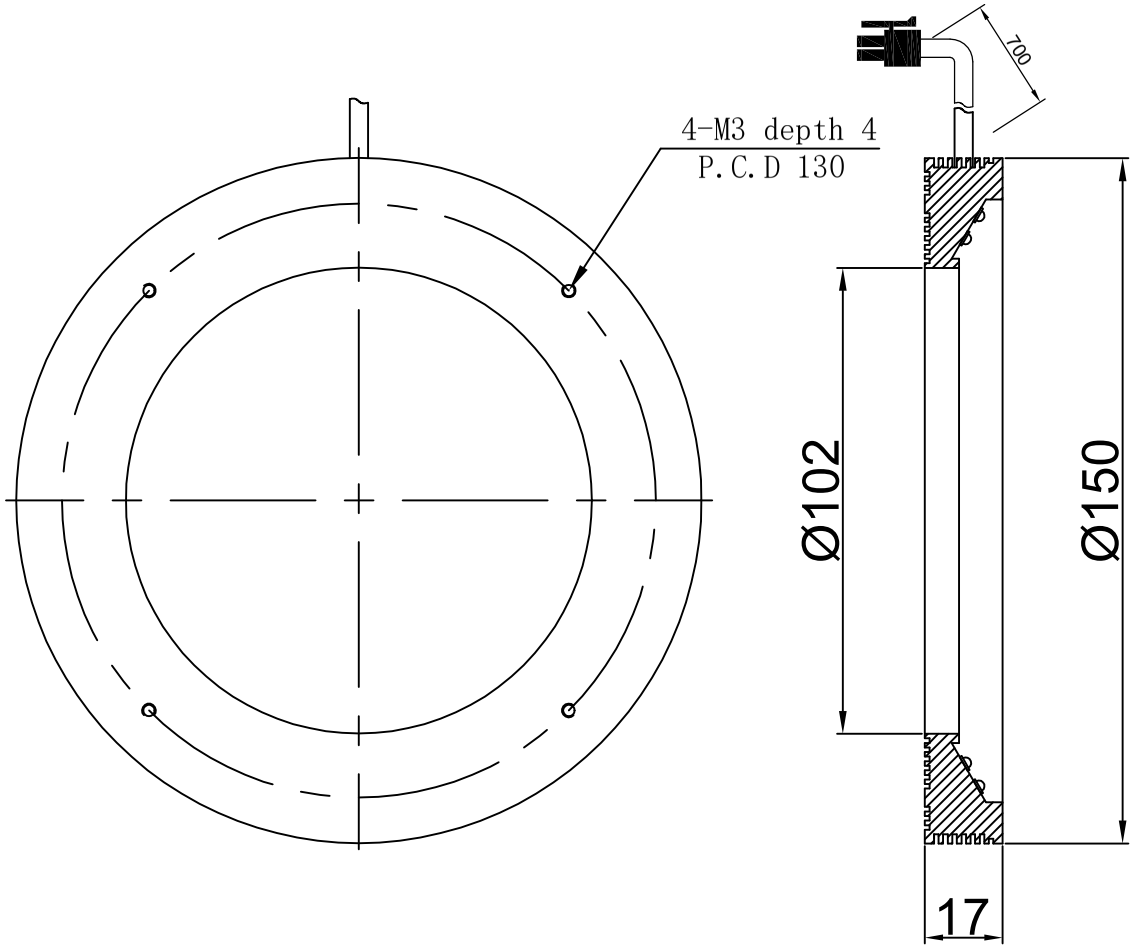

SPECIFICATIONS PARAMETER	
OPERATING VOLTAGE	DC24-26V
RATED CURRENT	W、G、B、V 5A
RATED POWER	W、G、B、V 120W
PEAK CURRENT	W、G、B、V 10A
PEAK POWER	IR、R/W、G、B、V 240W
WAVELENGTH OF LIGHT	
	G 520-530nm
	B 465-470nm
	W 6500-7000K

Wellinvision	PART NAME	HL-RH30-150-2	DATE	2015-12-4
			DWN. BY	
	UNIT: mm	TITLE DRAWING LAYOUT	CHKD. BY	
			APPD. BY	
			DWG. NO	